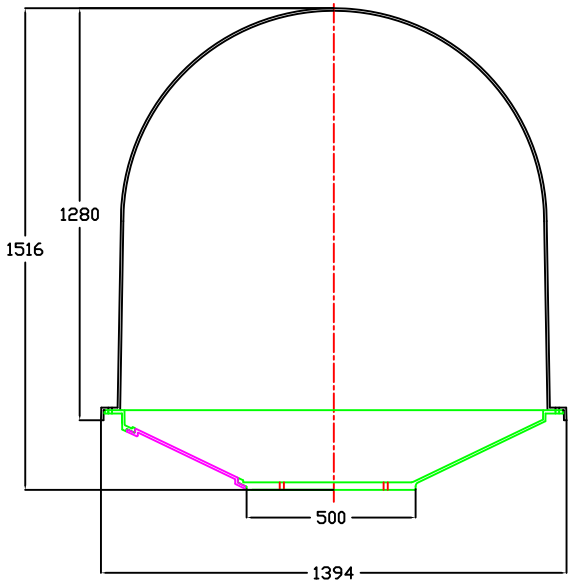

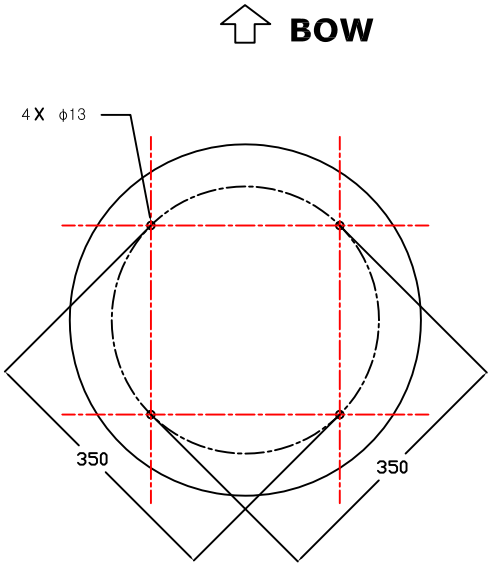

Mounting Surface Patten(unit : mm)

Z10 Mounting Hole Diagram	–	–	–	–	x x	–
Name	Q'ty	Material	Per Weight	Total Weight	Dimension	Reference

Designed by H.S. Lee	Checked by G.S.RYU	Approved B.W.JIN	Drawing No Z10A00	Date 2008. 05. 26

(주)한국네트웍시스템즈 Korea Network Systems	Model name SuperTrackZ10	Scale –
	Filename Z10A00_mounting hole diagram.dwg	Angle THIRD